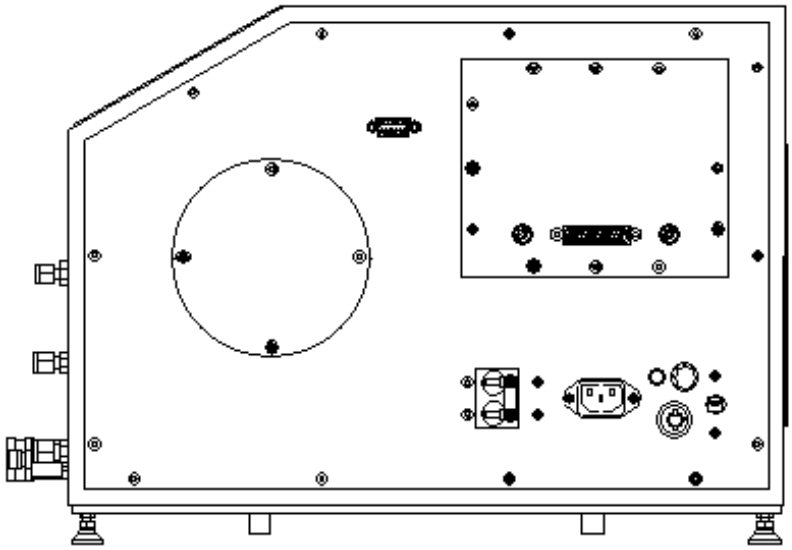

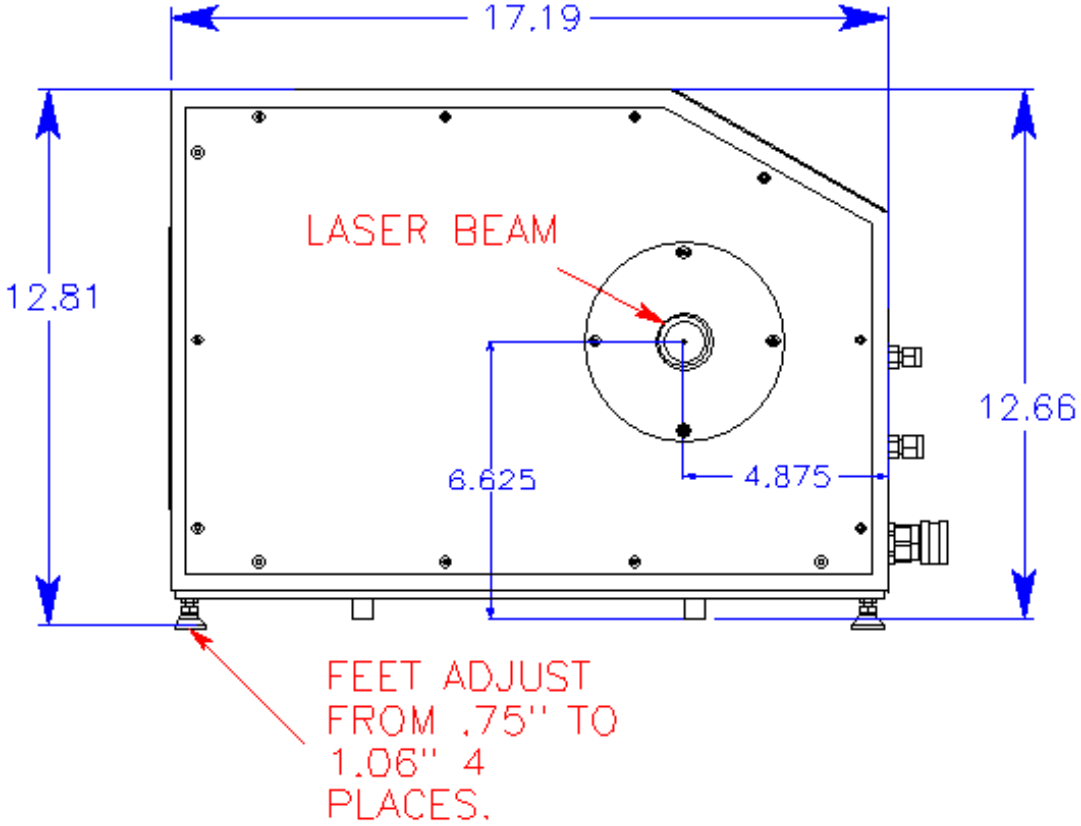
17.19
12.81
12.66
LASER BEAM
6.625
4.875
FEET ADJUST
FROM .75" TO
1.06" 4
PLACES.

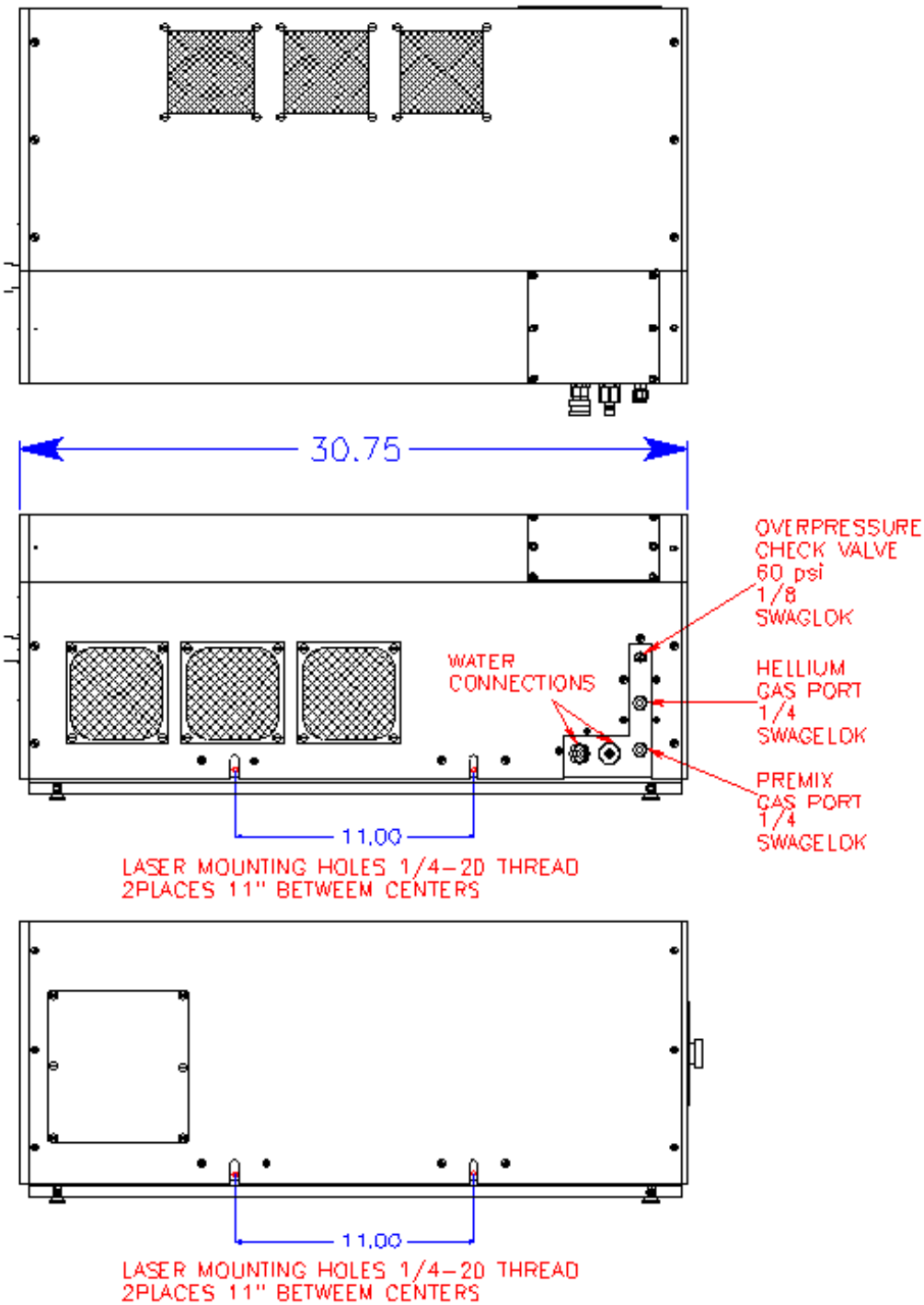
30.75
OVERPRESSURE
CHECK VALVE
60 psi
1/8
SWAGLOK
WATER
CONNECTIONS
HELLIUM
GAS PORT
1/4
SWAGELOK
PREMIX
GAS PORT
1/4
SWAGELOK
11.00
LASER MOUNTING HOLES 1/4-20 THREAD
2PLACES 11" BETWEEM CENTERS
11.00
LASER MOUNTING HOLES 1/4-20 THREAD
2PLACES 11" BETWEEM CENTERS
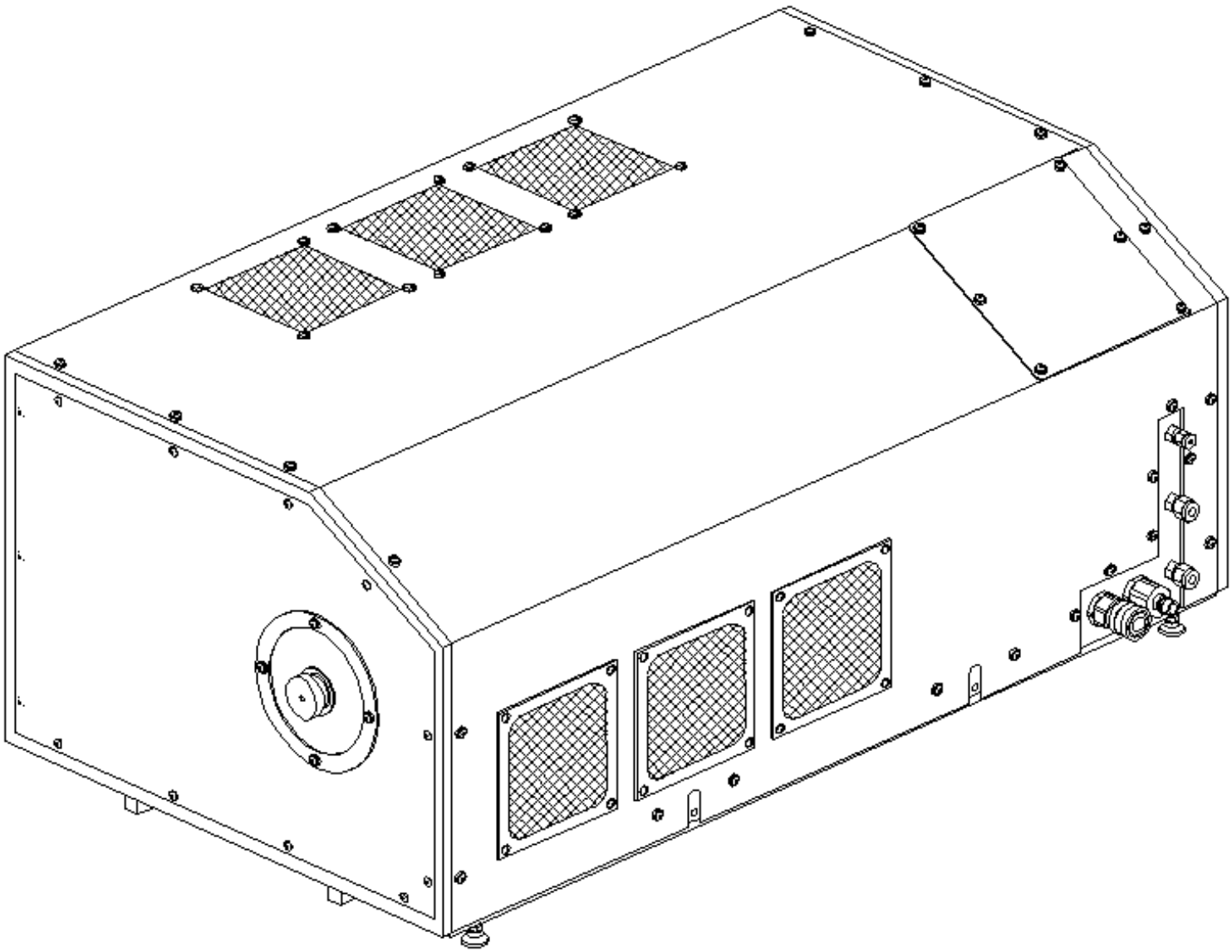
Isometric